Silicom

Connectivity Solutions

IS100

Silicom 100G Intelligent Bypass Switch

Product Description

Silicom 100G Intelligent QSFP28 Bypass switch (IS100) is Silicom forth generation of an active external Bypass switch that protects network integrity from network failures and network maintenance. The Silicom intelligent Bypass switch (IS100) is a self-generating heartbeat and controls the network switch mode of operation.

The Silicom IS100G1U is a 1U host system which supports up to two modules. A module supports one Bypass segment per module.

The Silicom IS100 supports 100 Gigabit Ethernet Multimode Fiber (100GBase-SR4) ,(100G Base-SR10) and 100 Gigabit Single mode fiber (100GBase-LR4) network standards. Each 100G Bypass module includes two MPO / LC ports for network ports, and two QSFP28 ports for the attached in-line network system.

The Silicom Intelligent Bypass switch (IS100) supports four modes of operations: Inline, Bypass, Tap and Linkdrop. In Inline mode, the IS100 diverts inline network traffic to attached in-line network system. In Bypass mode, the IS100 does not divert the traffic to the attached in-line network system and diverts it to other network link. In Tap mode, incoming traffic in port NET0 is mirrored to port MON0 and incoming traffic in port NET1 is mirrored to port MON1.In Linkdrop mode the IS100 disables the links on the network ports (NET0, NET1). The IS100 simulates switch / router cable disconnection.

The IS100 generates the heartbeat packets and transmits the heartbeat packet to the in-line Monitor / Network appliance port, the Monitor Network appliance receives the heartbeat packets and transmits is to its other port (bridges the heartbeat packet). The IS100 detects back the heartbeat packet and maintains the Inline mode.

The IS100 sets to Bypass, Tap or Linkdrop when it does not receive back the heartbeat packet from the Network / Monitor appliance. When the Network / Monitor appliance recovers, it transmits back the heartbeat packet and the Intelligent switch sets to Inline. The IS100 bypasses its Ethernet Monitor ports on event of power failure, Link failure, in-line software application system hang or user request.

The IS100 includes Double Bypass Safe architecture. The Silicom Double Bypass safe architecture is based on two Bypass routing circuitry: An Active Bypass circuitry and Passive Bypass circuitry. If the internal active bypass routing circuitry fails, the passive Bypass routing circuitry is activated.

The IS100 can be configured using:

• Simple CLI configuration management via a serial communication console port, Ethernet port using Telnet or SSH.

• Web interface management interface.

• SNMP.

The Silicom IS100 Bypass switch includes centralized management to all Bypass segments in the box.

The IS100G includes two redundant 90 – 240 V AC power supply or two redundant -48 DC power supply.

Figure: 1 – Front panel view of IS100G

Figure: 2 – Front panel view of IS100G with 2 modules

Key Features

- Self generating heartbeat pulses – No driver or management port is required to generate pulses
- Sets to Bypass when it detects in-line system failure
- Sets to Bypass when it detects in-line system link failure
- Sets to Bypass when it detects in-line software application system hang
- Sets to Bypass on Power failure
- Sets to Normal when it detects in-line system recovery
- Double Safe Bypass architecture with two routing circuitries
- Centralized managements
- Two on Board Watch Dog Timer (WDT) Controllers
- Software programmable time out interval
- Software Programmable WDT Enable / Disable
- Independent Bypass / Normal / Tap /Linkdrop operation in every module
- Supports up to two 100G Bypass segment in a 1U chassis
- Supports TAP mode of operation
- Simple CLI configuration management via serial port
- Telnet management interface via network management port
- SSH management interface via network management port
- Supports SNMP version 1, 2c, 3 (SHA, AES)

- Supports remote log
- Supports TACACS+
- Support RADIUS
- Supports NTP
- Supports time zone
- Supports multi configuration backup
- Support Two ports link feature – if one of the network ports link fails it will drop the link on the other network port as well
- Two redundant power supplies
- Optional -48V DC power supplies

IS100M100G4BP-CSR4

- Supports Short Range Fiber 100 Gigabit Ethernet with Optical module CFP4 (100GBase-SR4 50um)

IS100M100G4BP-SR10

- Supports Short Range (100m) Fiber 100 Gigabit Ethernet with Optical module CXP (100GBase-SR10)

IS100M100G4BP-CLR4

- Supports Long Reach Fiber 100 Gigabit Ethernet with Optical module CFP4 (100GBase-LR4)

Technical Specifications

Bypass Specifications	
WDT Interval (Software Programmable):	**Routing** Transmit heart beat packet every 3mS – 10Sec. Default 5mS Verification packets received every 10mS – 50Sec. Default 20mSec **Double Bypass** Transmit heart beat packet every 300mS – 60Sec. Default 7Sec Verification packets received every 1S – 253Sec. Default 20Sec
Production Default configuration	
Mode at Power up:	Bypass
Heartbeat:	Activated
Bypass Switch is ready and in-line device responds to heartbeat:	Change to Normal
In-line device responds to heartbeat:	Normal
In-line device does not respond heartbeat:	Bypass
Mode at Power 0ff:	Bypass

Heartbeat Packet:	Internetwork Packet Exchange
IS1001U: Bypass Switch 1U Host System Technical Specifications	
Dockings:	Front holders
Voltage Input:	AC: 90-240 VAC Auto-Select DC: -48 (-75 – -36) VDC
Power Consumption:	With no module : 240W With one LR4 module (with 90% utilization):405W With 2 LR4modules (with 90% utilization):552W
Size:	435mm x 586 mm x 44 mm (17.12” x 23.07” x 1.732”) Wide x Depth X Height
Weight:	10Kg
Operating Humidity:	0%–90%, non-condensing
Operating Temperature:	0°C – 40°C (32°F – 104°F)
Storage Temperature:	-20°C–65°C (-4°F–149°F)
EMC Certifications:	Class B FCC / CE / VCCI
MTBF*:	12.65 Years Operating conditions: Environment: GB, Temperature: 40.00 °C Current mode: Operating FR Units: FIT Default prediction Method: Telcordia Issue 4
IS1001U: Bypass Switch 1U Host System LEDs & Switches Specifications	
LEDs:	**Two Power LEDs: PS1, PS2** • PS1: power on – Light Green. • PS2: power on – Light Green. **System Status LEDs: 3 LEDs** • SysOK: system normal operation – Light Green. **Whol’m: in rack identification – Blinking Green.** • SysUP: system init during power up – Light Yellow. • Alm/Fail: system alarm – Light Red. Module Power LEDs: 3BICOLOR LEDs 1. M1: module1 power on – Light Green. module1 fail – Light Red. 2. M2: module2 power on – Light Green. module2 fail – Light Red
Switches	Sys PWR: Turn all system ON From ON to OFF – In order to switch system off required press and hold this pushbutton during 8s From OFF to ON – simple push will turn system on. Module ON/OFF power: 2 switches MxPWR: Turn Module x power (x = 1,2) From ON to OFF – In order to switch module off required press and hold this pushbutton during 5s From OFF to ON – simple push will turn module on. Reset: Small micro-switch stand behind hidden hole allows reset the system if this is necessary.

Connectors:	Management RJ-11 serial port RJ-45 Ethernet USB port
IS100M100G4BP-QS4 (50um)	
Fiber Gigabit Ethernet Technical Specifications – (100GBase-SR4) Adapters:	
IEEE Standard / Network topology:	Fiber Gigabit Ethernet, 100GBase-SR4 (850nM)
Data Transfer Rate:	4 x 25.78125G for each lane
Cables and Operating distance:	4x Multimode fiber:50um *50m maximum on OM3 MMF *75m maximum on OM4 MMF Theoretical Distance – Defined as half a distance
Output Transmit Power:	Maximum: -8.4dbm
Optical Receive Sensitivity:	Minimum: -5.2 dbm
Insertion Loss (Passive: Normal Mode)	Typical: 1.2dB Maximum: 2.1dB
Insertion Loss (Passive: Bypass Mode)	Typical: 1.2dB Maximum: 2.1dB
Power Consumption:	~30W
Size:	158.2mm x163.9 mm x 40.5 mm Wide x Depth x Height
Weight:	980gr / 34.57oz
Operating Humidity:	0%–90%, non-condensing
Operating Temperature:	0°C – 40°C (32°F – 104°F)
Storage Temperature:	-20°C–65°C (-4°F–149°F)
EMC Certifications:	Class A FCC / CE
Safety:	CB/UL
MTBF*:	170 Years. Operating conditions: Environment: GB, Temperature: 40.00 °C Current mode: Operating FR Units: FIT Default prediction Method: Telcordia Issue 4
Connectors:	Network: 2 MPO OM4 Monitor: 2 CFP4

IS100M100G4BP-QL4	
Fiber Gigabit Ethernet Technical Specifications – (100GBase-LR4) Adapters:	
IEEE Standard / Network topology:	Fiber Gigabit Ethernet, 100GBase-LR4 range of 4 wavelength (per 100G LR4 spec)
Data Transfer Rate:	4 x 25.78125G in four wavelengths
Network ports Cables and Operating distance:	Single mode fiber: four wavelengths 5000m maximum at 9 um **
Output Transmit Power:	Maximum: -4.3dbm
Optical Receive Sensitivity:	Minimum: -8.6dbm
Insertion Loss (Passive: Normal Mode)	Typical: 1.2dB Maximum: 2.1dB
Insertion Loss (Passive: Bypass Mode)	Typical: 1.2dB Maximum: 2.1dB
Power Consumption:	~30W
Size:	158.2mm x163.9 mm x 40.5 mm Wide x Depth x Height
Operating Humidity:	0%–90%, non-condensing
Operating Temperature:	0°C – 40°C (32°F – 104°F)
Storage Temperature:	-20°C–65°C (-4°F–149°F)
EMC Certifications:	Class A FCC / CE
Safety:	CB/UL
MTBF*:	170 Years. Operating conditions: Environment: GB, Temperature: 40.00 °C Current mode: Operating FR Units: FIT Default prediction Method: Telcordia Issue 4
Connectors	Network: 2 MPO Monitor: 2 CFP4

IS100M100G4BP-SR10	
Fiber Gigabit Ethernet Technical Specifications – (100GBase-SR10) Adapters:	
IEEE Standard / Network topology:	Fiber Gigabit Ethernet, 100GBase-SR10 (850nM)
Data Transfer Rate:	10 x 10.3125G for each lane
Cables and Operating distance:	10x Multimode fiber *50m maximum on OM3 MMF

	*75m maximum on OM4 MMF Theoretical Distance – Defined as half a distance
Output Transmit Power per lane:	Max : 3 DBM Min: – 7.6 DBM
Optical Receive Sensitivity per lane:	Max -5.4 DBM
Power Consumption:	~30W
Operating Humidity:	0%–90%, non-condensing
Operating Temperature:	0°C – 40°C (32°F – 104°F)
Storage Temperature:	-20°C–65°C (-4°F–149°F)
EMC Certifications:	Class B / FCC / CE / VCCI
Safety:	UL
MTBF:	49 Years. *According to Telcordia SR-332 Issue 2. Environmental condition – GB (Ground, Fixed, and Controlled). Ambient temperature 40°C.
Connectors:	Network: 2 MPO OM4 Monitor: 2 CXP
IS100M100G4BP-CSR4 (50um)	
Fiber Gigabit Ethernet Technical Specifications – (100GBase-SR4) Adapters:	
IEEE Standard / Network topology:	Fiber Gigabit Ethernet, 100GBase-SR4 (850nM)
Data Transfer Rate:	**4 x 25.78125G for each lane**
Cables and Operating distance:	4x Multimode fiber:50um *50m maximum on OM3 MMF *75m maximum on OM4 MMF Theoretical Distance – Defined as half a distance
Output Transmit Power:	As defined by IEEE 802.3bm
Optical Receive Sensitivity:	As defined by IEEE 802.3bm
Power Consumption:	~30W
Weight	1.2Kg
Operating Humidity:	0%–90%, non-condensing
Operating Temperature:	0°C – 40°C (32°F – 104°F)
Storage Temperature:	-20°C–65°C (-4°F–149°F)

EMC Certifications:	Class B / FCC / CE / VCCI
Safety:	UL
MTBF:	57 Years. *According to Telcordia SR-332 Issue 2. Environmental condition – GB (Ground, Fixed, and Controlled). Ambient temperature 40°C.
Connectors:	Network: 2 MPO OM4 Monitor: 2 CFP4
IS100M100G4BP-CLR4	
Fiber 100Gigabit Ethernet Technical Specifications – (100G Base-LR4) Adapters:	
IEEE Standard / Network topology:	Fiber Gigabit Ethernet, 100GBase-LR4 range of 4 wavelength (per 100G LR4 spec)
Data Transfer Rate:	4 x 25.78125G in four wavelengths
Netowrk ports Cables and Operating distance:	Single mode fiber: four wavelengths 5000m maximum at 9 um **
Power Consumption:	~30W
Weight	1.2kg
Operating Humidity:	0%–90%, non-condensing
Operating Temperature:	0°C – 40°C (32°F – 104°F)
Storage Temperature:	-20°C–65°C (-4°F–149°F)
EMC Certifications:	Class B FCC / CE / VCCI /
Safety:	UL
MTBF*:	> 150,000 hours
Connectors	Network: 2 MPO Monitor: 2 CFP4

Figure: 3 – Normal Mode Functional Block Diagram

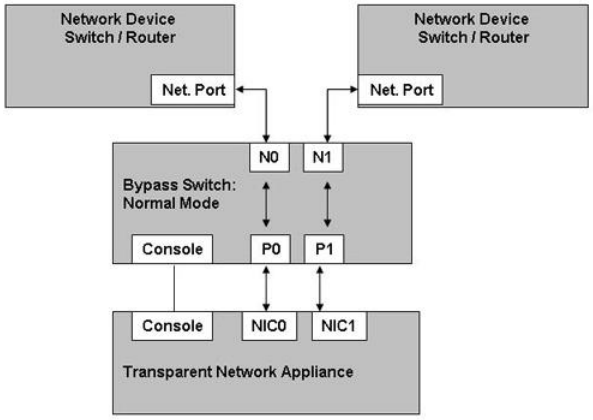

Figure: 4 – Bypass Mode Functional Block Diagram

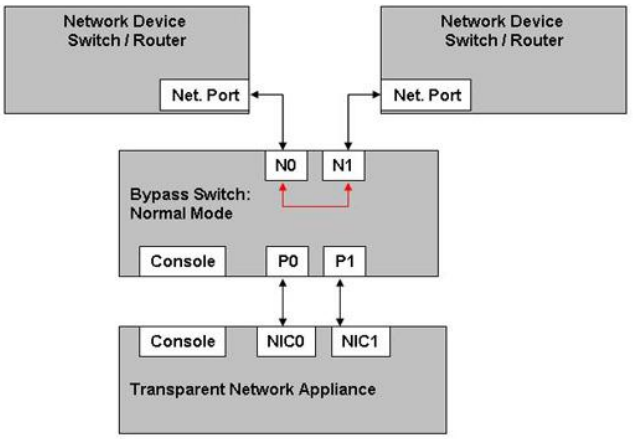

Figure: 5 – Tap Mode Functional Block Diagram

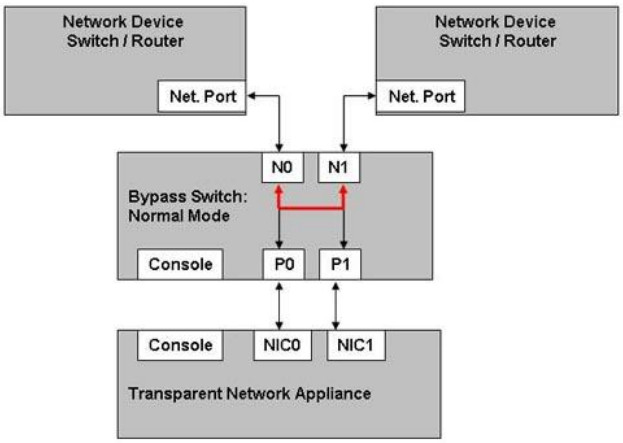

Figure: 6 – Linkdrop Mode Functional Block

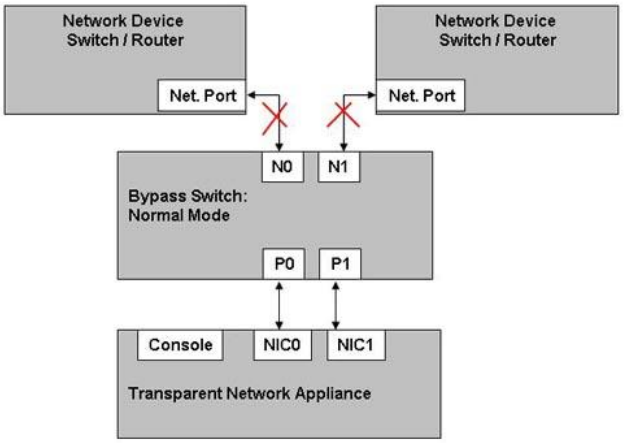

Order Information

P/N	Description	Notes
IS100G-Q-US	1U Host System 100Gb, AC/US	90-240 VAC Auto-Select, US cable
IS100G-Q-EU	1U Host System 100Gb, AC/EU	90-240 VAC Auto-Select, EU cable
IS100G-Q-48V	1U Host System 100Gb ,48V-DC	Power supply -48VDC
IS100M100G4BP-QS4	100Gb (SR4) Fiber Bypass Module	SR4 MMF Bypass 100G – QSFP28 (SR4 on the Network and Monitor ports)
IS100M100G4BP-QL4	100Gb (LR4) Fiber Bypass Module	LR4 SMF Bypass 100G – QSFP28 (LR4 on the Network and Monitor ports)
IS100M100G4BP-QL4S4	100Gb(LR4/SR4) Fiber Bypass Module	LR4 SMF Bypass 100G – QSFP28 (LR4 on the Network and SR4 on the Monitor ports)
IS100M40G4BP-QS4-IX	40Gb (SR4) Fiber Bypass Module	SR4 MMF Bypass 40G – QSFP+ (MPO/ SR4 on the Network and Monitor ports)
IS100M40G4BP-QL4-IX	40Gb (LR4) Fiber Bypass Module	LR4 SMF Bypass 40G – QSPP+ (LC/ LR4 on the Network and Monitor ports)
IS100M40G4BP-QBD-IX	40Gb (Bidi-SR4) Fiber Bypass Module	Bidi -SR4 MMF Bypass 40G – QSPP+ (LC/Bidi on the Network and Monitor ports)
IS00M100G4BP-CSR4	100Gb (SR4) Fiber Bypass Module	SR4 MMF Bypass 100G – CFP4 (SR4 on the Network and Monitor ports)
IS100M100G4BP-CLR4	100Gb (LR4) Fiber Bypass Module	LR4 SMF Bypass 100G – CFP4 (LR4 on the Network and SR4 on the Monitor ports)
IS100M100G4BP-SR101	100Gb (SR10) Fiber Bypass Module	SR10 Bypass 100G –CXP (SR10 on the Network and Monitor ports)
IS100M100G4BP-CM4-RU	100Gb (CWDM4) Fiber Bypass Module	CWDM4 Bypass 100G – (CWDM4 on the Network and SR4 on the Monitor ports)
IS100M100G4BP-QE4S4-RU	100Gb (ER/SR) Fiber Bypass Module	ER Bypass 100Gb - (ER on the Networking, SR-Monitoring)

1V4